ROBOTICS 4/M
SOLUTIONS TO TUTORIAL 1

Q1. THE TRANSFORMATION MATRIX FOR A CARTESIAN MANIPULATOR WITH RPY END-EFFECTOR IS :-

$$
{}^{4}T_H = \begin{bmatrix} c\phi_a c\phi_o & c\phi_a s\phi_o s\phi_n - s\phi_a c\phi_n & c\phi_a s\phi_o c\phi_n + s\phi_a s\phi_n & P_x \\ s\phi_a c\phi_o & s\phi_a s\phi_o s\phi_n + c\phi_a c\phi_n & s\phi_a s\phi_o c\phi_n - c\phi_a s\phi_n & P_y \\ -s\phi_o & c\phi_o s\phi_n & c\phi_o c\phi_n & P_z \\ 0 & 0 & 0 & 1 \end{bmatrix}
$$

$c\phi_a = \cos(32^\circ) = 0.848$ $\quad s\phi_a = \sin(32^\circ) = 0.530$

$c\phi_o = \cos(178) = -0.999$ $\quad s\phi_o = \sin(178^\circ) = 0.035$

$c\phi_n = \cos(4^\circ) = 0.998$ $\quad s\phi_n = \sin(4^\circ) = 0.070$

$P_x = x = 2.3 \quad P_y = y = 1.7 \quad P_z = z = 7.4$

$$
{}^{4}T_H = \begin{bmatrix} 0.848 \times -0.999 & 0.848 \times 0.035 \times 0.07 - 0.53 \times 0.998 & 0.848 \times 0.035 \times 0.998 + 0.53 \times 0.07 & 2.3 \\ 0.530 \times -0.999 & 0.53 \times 0.035 \times 0.07 + 0.848 \times 0.998 & 0.53 \times 0.035 \times 0.998 - 0.848 \times 0.07 & 1.7 \\ -0.035 & -0.999 \times 0.07 & -0.999 \times 0.998 & 7.4 \\ 0 & 0 & & 1 \end{bmatrix}
$$

$$
= \begin{bmatrix} -0.847 & -0.527 & 0.067 & 2.3 \\ 0.530 & 0.848 & -0.041 & 1.7 \\ -0.035 & -0.070 & -0.997 & 7.4 \\ 0 & 0 & 0 & 1 \end{bmatrix}
$$

P2

THE ORIENTATION OF THE END-EFFECTOR IS

$$\underset{\sim}{nog} = \begin{bmatrix} -0.847 & -0.527 & 0.067 \\ 0.530 & 0.848 & -0.041 \\ -0.035 & -0.070 & -0.997 \end{bmatrix}$$

THE POSITION OF THE END-EFFECTOR IS

$$\underline{P} = \begin{bmatrix} 2.3 \\ 1.7 \\ 7.4 \end{bmatrix}$$

Q2. THE POSITION AND ORIENTATION SUBMATRICES ARE:

$$\underline{P} = \begin{bmatrix} 2.441 \\ 4.591 \\ 8.200 \end{bmatrix} \quad \underset{\sim}{nog} = \begin{bmatrix} 0.460 & -0.861 & 0.220 \\ 0.859 & 0.494 & 0.137 \\ -0.226 & 0.126 & 0.966 \end{bmatrix}$$

FOR THE POSITION VECTOR THE FOLLOWING RELATIONSHIPS APPLY:

$$\underline{P} = \begin{bmatrix} r C\alpha \\ r S\alpha \\ \ell \end{bmatrix} = \begin{bmatrix} 2.441 \\ 4.591 \\ 8.200 \end{bmatrix}$$

THEREFORE

$$r C\alpha = 2.441 \quad -(1)$$
$$r S\alpha = 4.591 \quad -(2)$$
$$\ell = 8.2 \quad -(3)$$

FROM (3) WE GET $\ell = 8.2\,m$

(P3)

BY DIVIDING (2) BY (1) WE GET:

$$\frac{r\,S\alpha}{r\,C\alpha} = \tan\alpha = \frac{4.591}{2.441} = 1.881$$

$$\therefore \quad \alpha = \tan^{-1}(1.881) = \underline{\underline{62^\circ}} \qquad (4)$$

SUBSTITUTING (4) INTO (1) GIVES

$$r\,C(62^\circ) = 2.441$$
$$r = 2.441 / 0.4695$$
$$r = \underline{\underline{5.2\,m}}$$

THEREFORE THE JOINT VARIABLES FOR THE CYLINDRICAL ROBOT ARE:

$$l = 8.2m, \quad r = 5.2m, \quad \alpha = 62^\circ$$

THE ORIENTATION OF THE END-EFFECTOR GIVES THE WRIST JOINT VARIABLES. THESE ARE CALCULATED AS FOLLOWS:

$$\phi = \tan^{-1}(a_y/a_x) = \tan^{-1}\left(\frac{0.137}{0.220}\right) = 32^\circ \text{ OR } 212^\circ$$

$$\psi = \tan^{-1}((-n_x s\phi + n_y c\phi)/(-o_x s\phi + o_y c\phi))$$

$$= \tan^{-1}((-0.460 \sin(32^\circ) + 0.859 \cos(32^\circ))/(+0.861 \sin(32^\circ) + 0.494 \cos(32^\circ))$$

$$= \tan^{-1}(0.485/0.875)$$

$$= 29^\circ \text{ OR } 209^\circ \quad (\text{FOR } \phi = 212^\circ)$$

(P4)

$$\theta = \tan^{-1}\left((a_x \cos\phi + a_y s\phi)/a_z\right) = \tan^{-1}\left(\frac{0.220\cos(32^\circ) + 0.137\sin(32^\circ)}{0.966}\right)$$

$$= \tan^{-1}\left(\frac{0.259}{0.966}\right) = 15^\circ$$

OR

$$\theta = \tan^{-1}\left(\frac{0.220\cos(212^\circ) + 0.137\sin(212^\circ)}{0.966}\right) = \tan^{-1}\left(\frac{-0.259}{0.966}\right)$$

$$= -15^\circ$$

$\therefore$ JOINT VARIABLES FOR MANIPULATOR AND END-EFFECTOR ARE:

$r = 5.2\text{m}$, $\ell = 8.2\text{m}$, $\alpha = 62^\circ$

$\phi = 32^\circ$ OR 212°, $\psi = 29^\circ$ OR 209°, $\theta = 15^\circ$ OR -15°

Q3. (a) THIS IS A CYLINDRICAL MANIPULATOR. FROM NOTES THE TRANSFORM IS:

$$T_{CYL}(r, \alpha, \ell) = \begin{bmatrix} 1 & 0 & 0 & 0 \\ 0 & 1 & 0 & 0 \\ 0 & 0 & 1 & \ell \\ 0 & 0 & 0 & 1 \end{bmatrix} \cdot \begin{bmatrix} C\alpha & -S\alpha & 0 & 0 \\ S\alpha & C\alpha & 0 & 0 \\ 0 & 0 & 1 & 0 \\ 0 & 0 & 0 & 1 \end{bmatrix} \cdot \begin{bmatrix} 1 & 0 & 0 & r \\ 0 & 1 & 0 & 0 \\ 0 & 0 & 1 & 0 \\ 0 & 0 & 0 & 1 \end{bmatrix}$$

$$= \begin{bmatrix} C\alpha & -S\alpha & 0 & rC\alpha \\ S\alpha & C\alpha & 0 & rS\alpha \\ 0 & 0 & 1 & \ell \\ 0 & 0 & 0 & 1 \end{bmatrix}$$

(b) THE DENAVIT – HARTENBERG REPRESENTATION BEGINS WITH ASSIGNING Z-X AXES TO EACH OF THE JOINTS (AS SHOWN IN THE FOLLOWING FIGURE):

P5

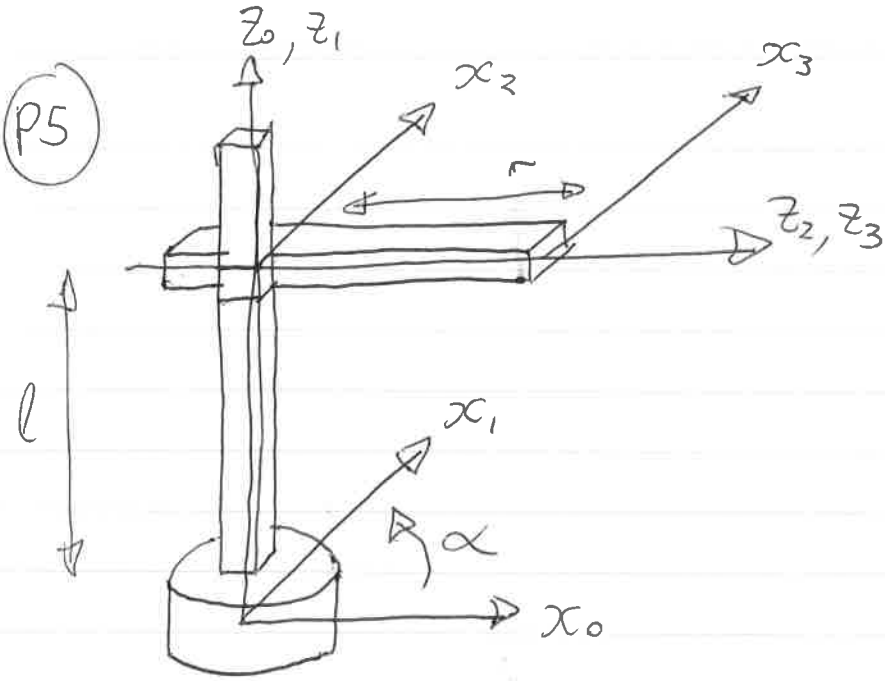

THE D-H TABLE IS:

#	θ	d	a	α
1	α	0	0	0
2	0	l	0	90°
3	0	r	0	0

$$A_1 = \begin{bmatrix} C\alpha & -S\alpha C(0) & S\alpha S(0) & 0 \\ S\alpha & C\alpha C(0) & -C\alpha S(0) & 0 \\ 0 & S(0) & C(0) & 0 \\ 0 & 0 & 0 & 1 \end{bmatrix} = \begin{bmatrix} C\alpha & -S\alpha & 0 & 0 \\ S\alpha & C\alpha & 0 & 0 \\ 0 & 0 & 1 & 0 \\ 0 & 0 & 0 & 1 \end{bmatrix}$$

$$A_2 = \begin{bmatrix} C(0) & -S(0)C(90) & S(0)S(90) & 0 \\ S(0) & C(0)C(90) & -C(0)S(90) & 0 \\ 0 & S(90) & C(90) & l \\ 0 & 0 & 0 & 1 \end{bmatrix} = \begin{bmatrix} 1 & 0 & 0 & 0 \\ 0 & 0 & -1 & 0 \\ 0 & 1 & 0 & l \\ 0 & 0 & 0 & 1 \end{bmatrix}$$

$$A_3 = \begin{bmatrix} C(0) & -S(0)C(0) & S(0)S(0) & 0 \\ S(0) & C(0)C(0) & -C(0)S(0) & 0 \\ 0 & S(0) & C(0) & r \\ 0 & 0 & 0 & 1 \end{bmatrix} = \begin{bmatrix} 1 & 0 & 0 & 0 \\ 0 & 1 & 0 & 0 \\ 0 & 0 & 1 & r \\ 0 & 0 & 0 & 1 \end{bmatrix}$$

$${}^{4}T_H = A_1 A_2 A_3 = \begin{bmatrix} C\alpha & 0 & S\alpha & rS\alpha \\ S\alpha & 0 & -C\alpha & -rC\alpha \\ 0 & 1 & 0 & l \\ 0 & 0 & 0 & 1 \end{bmatrix}$$

(P6) Q4 (a) THE D-H REPRESENTATION STARTS WITH THE ASSIGNMENT OF Z - X AXES.

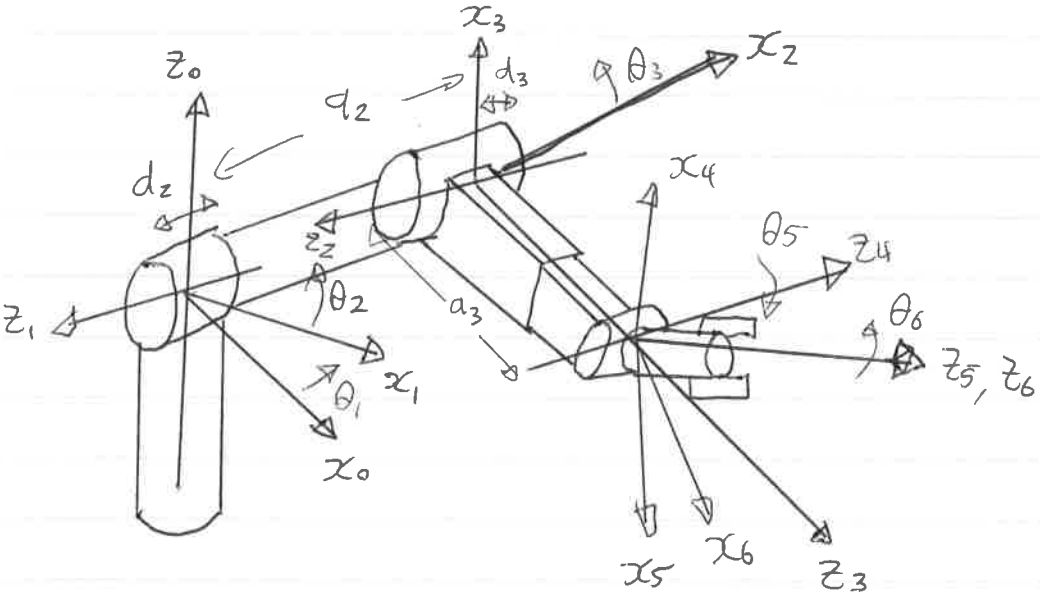

THIS GIVES THE FOLLOWING D-H TABLE

#	θ	d	a	α
1	θ_1	0	0	90°
2	θ_2	$-d_2$	a_2	0°
3	θ_3	d_3	0	90°
4	0°	a_3	0	90°
5	θ_5	0	0	90°
6	θ_6	0	0	0

THESE GIVE THE FOLLOWING TRANSFORMATION MATRICES.

$$A_1 = \begin{bmatrix} C\theta_1 & -S\theta_1 C(90) & S\theta_1 . S(90) & 0 . C\theta_1 \\ S\theta_1 & C\theta_1 C(90) & -C\theta_1 . S(90) & 0 . S\theta_1 \\ 0 & S(90) & C(90) & 0 \\ 0 & 0 & 0 & 1 \end{bmatrix} = \begin{bmatrix} C\theta_1 & 0 & S\theta_1 & 0 \\ S\theta_1 & 0 & -C\theta_1 & 0 \\ 0 & 1 & 0 & 0 \\ 0 & 0 & 0 & 1 \end{bmatrix}$$

$$A_2 = \begin{bmatrix} C\theta_2 & -S\theta_2 C(0) & S\theta_2 S(0) & a_2 C\theta_2 \\ S\theta_2 & C\theta_2 C(0) & -C\theta_2 S(0) & a_2 S\theta_2 \\ 0 & S(0) & C(0) & -d_2 \\ 0 & 0 & 0 & 1 \end{bmatrix} = \begin{bmatrix} C\theta_2 & -S\theta_2 & 0 & a_2 C\theta_2 \\ S\theta_2 & C\theta_2 & 0 & a_2 S\theta_2 \\ 0 & 0 & 1 & -d_2 \\ 0 & 0 & 0 & 1 \end{bmatrix}$$

$$A_3 = \begin{bmatrix} C\theta_3 & -S\theta_3 C(90) & S\theta_3 S(90) & 0 . C\theta_3 \\ S\theta_3 & C\theta_3 C(90) & -C\theta_3 S(90) & 0 . S\theta_3 \\ 0 & S(90) & C(90) & d_3 \\ 0 & 0 & 0 & 1 \end{bmatrix} = \begin{bmatrix} C\theta_3 & 0 & S\theta_3 & 0 \\ S\theta_3 & 0 & -C\theta_3 & 0 \\ 0 & 1 & 0 & d_3 \\ 0 & 0 & 0 & 1 \end{bmatrix}$$

P7

$$A_4 = \begin{bmatrix} c(0) & -s(0)c(90) & s(0)s(90) & 0.c(0) \\ s(0) & c(0)c(90) & -c(0)s(90) & 0.s(0) \\ 0 & s(90) & c(90) & a_3 \\ 0 & 0 & 0 & 1 \end{bmatrix} = \begin{bmatrix} 1 & 0 & 0 & 0 \\ 0 & 0 & -1 & 0 \\ 0 & 1 & 0 & a_3 \\ 0 & 0 & 0 & 1 \end{bmatrix}$$

$$A_5 = \begin{bmatrix} c\theta_5 & -s\theta_5\, c(90) & s\theta_5\, s(90) & 0.c\theta_5 \\ s\theta_5 & c\theta_5\, c(90) & -c\theta_5\, s(90) & 0.s\theta_5 \\ 0 & s(90) & c(90) & 0 \\ 0 & 0 & 0 & 1 \end{bmatrix} = \begin{bmatrix} c\theta_5 & 0 & s\theta_5 & 0 \\ s\theta_5 & 0 & -c\theta_5 & 0 \\ 0 & 1 & 0 & 0 \\ 0 & 0 & 0 & 1 \end{bmatrix}$$

$$A_6 = \begin{bmatrix} c\theta_6 & -s\theta_6\, c(0) & s\theta_6\, s(0) & 0.c\theta_6 \\ s\theta_6 & c\theta_6\, c(0) & -c\theta_6\, s(0) & 0.s\theta_6 \\ 0 & s(0) & c(0) & 0 \\ 0 & 0 & 0 & 1 \end{bmatrix} = \begin{bmatrix} c\theta_6 & -s\theta_6 & 0 & 0 \\ s\theta_6 & c\theta_6 & 0 & 0 \\ 0 & 0 & 1 & 0 \\ 0 & 0 & 0 & 1 \end{bmatrix}$$

$${}^{u}T_H = A_1 . A_2 . A_3 . A_4 . A_5 . A_6 \qquad \text{(POST MULTIPLE)}$$

$$= \begin{bmatrix} c_1 & 0 & s_1 & 0 \\ s_1 & 0 & -c_1 & 0 \\ 0 & 1 & 0 & 1 \\ 0 & 0 & 0 & 1 \end{bmatrix} \begin{bmatrix} c_2 & -s_2 & 0 & a_2 c_2 \\ s_2 & c_2 & 0 & a_2 s_2 \\ 0 & 0 & 1 & -d_2 \\ 0 & 0 & 0 & 1 \end{bmatrix} \begin{bmatrix} c_3 & 0 & s_3 & 0 \\ s_3 & 0 & -c_3 & 0 \\ 0 & 1 & 0 & d_3 \\ 0 & 0 & 0 & 1 \end{bmatrix} \begin{bmatrix} 1 & 0 & 0 & 0 \\ 0 & 0 & -1 & 0 \\ 0 & 1 & 0 & a_3 \\ 0 & 0 & 0 & 1 \end{bmatrix} \begin{bmatrix} c_5 & 0 & s_5 & 0 \\ s_5 & 0 & -c_5 & 0 \\ 0 & 1 & 0 & 0 \\ 0 & 0 & 0 & 1 \end{bmatrix} \begin{bmatrix} c_6 & -s_6 & 0 & 0 \\ s_6 & c_6 & 0 & 0 \\ 0 & 0 & 1 & 0 \\ 0 & 0 & 0 & 1 \end{bmatrix}$$

$$= \begin{bmatrix} c_1 c_2 & -c_1 s_2 & s_1 & a_2 c_1 c_2 - d_2 s_1 \\ s_1 c_2 & -s_1 s_2 & -c_1 & a_2 s_1 c_2 + d_2 c_1 \\ s_2 & c_2 & 0 & a_2 s_2 \\ 0 & 0 & 0 & 1 \end{bmatrix} \begin{bmatrix} A_3 \end{bmatrix} \begin{bmatrix} A_4 \end{bmatrix} \begin{bmatrix} A_5 \end{bmatrix} \begin{bmatrix} A_6 \end{bmatrix}$$

$$= \begin{bmatrix} c_1 c_{23} & s_1 & c_1 s_{23} & a_2 c_1 c_2 - (d_2 - d_3) s_1 \\ s_1 c_{23} & -c_1 & s_1 s_{23} & a_2 s_1 c_2 + (d_2 - d_3) c_1 \\ s_{23} & 0 & -c_{23} & a_2 s_2 \\ 0 & 0 & 0 & 1 \end{bmatrix} \begin{bmatrix} A_4 \end{bmatrix} \begin{bmatrix} A_5 \end{bmatrix} \begin{bmatrix} A_6 \end{bmatrix}$$

NOTE : $C_{23} \equiv \cos(\theta_2 + \theta_3)$ AND $S_{23} \equiv \sin(\theta_2 + \theta_3)$

P8

$$= \begin{bmatrix} C_1 C_{23} & C_1 S_{23} & -S_1 & a_3 C_1 S_{23} + a_2 C_1 C_2 - (d_2 - d_3) S_1 \\ S_1 C_{23} & S_1 S_{23} & C_1 & a_3 S_1 S_{23} + a_2 S_1 C_2 + (d_2 - d_3) C_1 \\ S_{23} & -C_{23} & 0 & -a_3 C_{23} + a_2 S_2 \\ 0 & 0 & 0 & 1 \end{bmatrix} \begin{bmatrix} A_5 \end{bmatrix} \begin{bmatrix} A_6 \end{bmatrix}$$

$$= \begin{bmatrix} C_1 C_{23-5} & -S_1 & -C_1 S_{23-5} & a_3 C_1 S_{23} + a_2 C_1 C_2 - (d_2 - d_3) S_1 \\ S_1 C_{23-5} & C_1 & -S_1 S_{23-5} & a_3 S_1 S_{23} + a_2 S_1 C_2 + (d_2 - d_3) C_1 \\ S_{23-5} & 0 & C_{23-5} & -a_3 C_{23} + a_2 S_2 \\ 0 & 0 & 0 & 1 \end{bmatrix} \begin{bmatrix} A_6 \end{bmatrix}$$

$$= \begin{bmatrix} C_1 C_{23-5} C_6 - S_1 S_6 & -C_1 . C_{23-5} . S_6 - S_1 C_6 & -C_1 S_{23-5} & a_3 C_1 S_{23} + a_2 C_1 C_2 - (d_2 - d_3) S_1 \\ S_1 C_{23-5} C_6 + C_1 S_6 & -S_1 . C_{23-5} . S_6 + C_1 . C_6 & -S_1 S_{23-5} & a_3 S_1 S_{23} + a_2 S_1 C_2 + (d_2 - d_3) C_1 \\ S_{23-5} . C_6 & -S_{23-5} . S_6 & C_{23-5} & -a_3 C_{23} + a_2 S_2 \\ 0 & 0 & 0 & 1 \end{bmatrix}$$

NOTE $\quad C_{23-5} \equiv \cos(\theta_2 + \theta_3 - \theta_5)$

P9

(b)

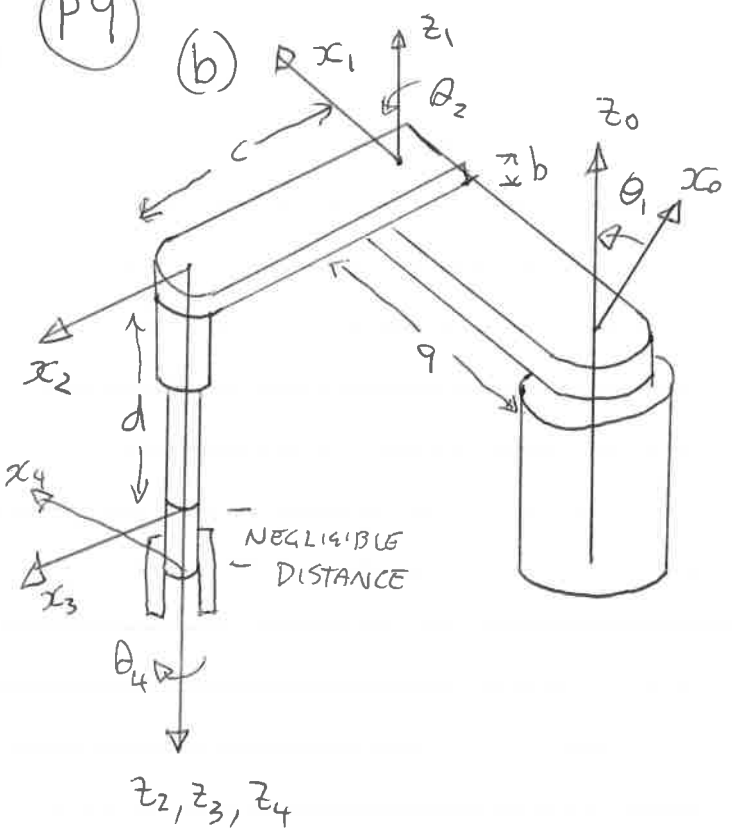

D-H TABLE

#	θ	d	a	α
1	θ_1	b	a	0
2	θ_2	0	c	180°
3	0	d	0	0
4	θ_4	0	0	0

THIS RESULTS IN THE FOLLOWING MATRICES

$$A_1 = \begin{bmatrix} c\theta_1 & -s\theta_1 c(0) & s\theta_1 s(0) & a c\theta_1 \\ s\theta_1 & c\theta_1 c(0) & -c\theta_1 s(0) & a s\theta_1 \\ 0 & s(0) & c(0) & b \\ 0 & 0 & 0 & 1 \end{bmatrix} = \begin{bmatrix} c\theta_1 & -s\theta_1 & 0 & a c\theta_1 \\ s\theta_1 & c\theta_1 & 0 & a s\theta_1 \\ 0 & 0 & 1 & b \\ 0 & 0 & 0 & 1 \end{bmatrix}$$

$$A_2 = \begin{bmatrix} c\theta_2 & -s\theta_2 c(180) & s\theta_1 s(180) & c.c\theta_2 \\ s\theta_2 & c\theta_2 c(180) & -c\theta_1 s(180) & c.s\theta_2 \\ 0 & s(180) & c(180) & 0 \\ 0 & 0 & 0 & 1 \end{bmatrix} = \begin{bmatrix} c\theta_2 & s\theta_2 & 0 & c.c\theta_2 \\ s\theta_2 & -c\theta_2 & 0 & c.s\theta_2 \\ 0 & 0 & -1 & 0 \\ 0 & 0 & 0 & 1 \end{bmatrix}$$

$$A_3 = \begin{bmatrix} c(0) & -s(0)c(0) & s(0).s(0) & 0.c(0) \\ s(0) & c(0)c(0) & -c(0).s(0) & 0.s(0) \\ 0 & s(0) & c(0) & d \\ 0 & 0 & 0 & 1 \end{bmatrix} = \begin{bmatrix} 1 & 0 & 0 & 0 \\ 0 & 1 & 0 & 0 \\ 0 & 0 & 1 & d \\ 0 & 0 & 0 & 1 \end{bmatrix}$$

$$A_4 = \begin{bmatrix} c\theta_4 & -s\theta_4 c(0) & s\theta_4 s(0) & 0.c\theta_4 \\ s\theta_4 & c\theta_4 c(0) & -c\theta_4 s(0) & 0.s\theta_4 \\ 0 & s(0) & c(0) & 0 \\ 0 & 0 & 0 & 1 \end{bmatrix} = \begin{bmatrix} c\theta_4 & -s\theta_4 & 0 & 0 \\ s\theta_4 & c\theta_4 & 0 & 0 \\ 0 & 0 & 1 & 0 \\ 0 & 0 & 0 & 1 \end{bmatrix}$$

P(10)

$$ {}^{u}T_{H} = A_1 \cdot A_2 \cdot A_3 \cdot A_4 $$

$$ = \begin{bmatrix} C_1 & -S_1 & 0 & aC_1 \\ S_1 & C_1 & 0 & aS_1 \\ 0 & 0 & 1 & b \\ 0 & 0 & 0 & 1 \end{bmatrix} \begin{bmatrix} C_2 & +S_2 & 0 & c.C_2 \\ S_2 & -C_2 & 0 & c.S_2 \\ 0 & 0 & -1 & 0 \\ 0 & 0 & 0 & 1 \end{bmatrix} \begin{bmatrix} 1 & 0 & 0 & 0 \\ 0 & 1 & 0 & 0 \\ 0 & 0 & 1 & d \\ 0 & 0 & 0 & 1 \end{bmatrix} \begin{bmatrix} C_4 & -S_4 & 0 & 0 \\ S_4 & C_4 & 0 & 0 \\ 0 & 0 & 1 & 0 \\ 0 & 0 & 0 & 1 \end{bmatrix} $$

$$ = \begin{bmatrix} C_{12} & S_{12} & 0 & cC_{12} + aC_1 \\ S_{12} & -C_{12} & 0 & cS_{12} + aS_1 \\ 0 & 0 & -1 & b \\ 0 & 0 & 0 & 1 \end{bmatrix} \begin{bmatrix} A_3 \end{bmatrix} \begin{bmatrix} A_4 \end{bmatrix} $$

$$ = \begin{bmatrix} C_{12} & S_{12} & 0 & c.C_{12} + a.C_1 \\ S_{12} & -C_{12} & 0 & c.S_{12} + a.S_1 \\ 0 & 0 & -1 & b-d \\ 0 & 0 & 0 & 1 \end{bmatrix} \begin{bmatrix} A_4 \end{bmatrix} $$

$$ = \begin{bmatrix} C_{12-4} & S_{12-4} & 0 & c.C_{12} + aC_1 \\ S_{12-4} & -C_{12-4} & 0 & c.S_{12} + aS_1 \\ 0 & 0 & -1 & b-d \\ 0 & 0 & 0 & 1 \end{bmatrix} $$

NOTE: $C_{12-4} \equiv \cos(\theta_1 + \theta_2 - \theta_4)$

$S_{12-4} \equiv \sin(\theta_1 + \theta_2 - \theta_4)$

(P11) Q5. THE MANIPULATOR CAN BE REPRESENTED THUS:

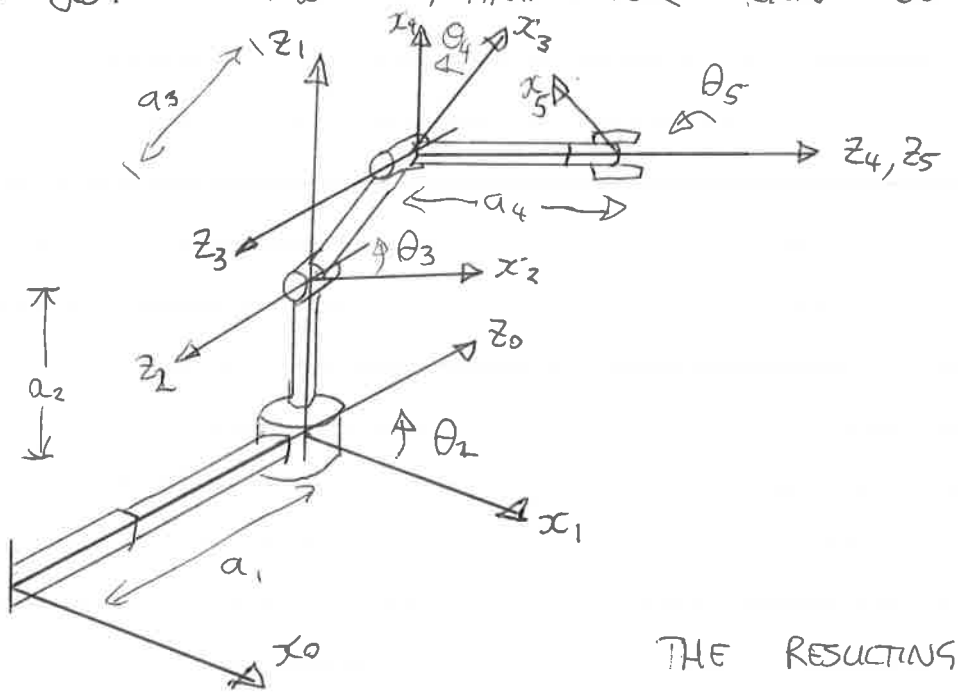

#	θ	d	a	α
1	0	a_1	0	90°
2	θ_2	a_2	0	90°
3	θ_3	0	a_3	0
4	θ_4	0	0	90°
5	θ_5	a_4	0	0

THE RESULTING MATRICES ARE:

$$A_1 = \begin{bmatrix} c(0) & -s(0)c(90) & s(0)s(90) & 0.c(0) \\ s(0) & c(0)c(90) & -c(0)s(90) & 0.s(0) \\ 0 & s(90) & c(90) & a_1 \\ 0 & 0 & 0 & 1 \end{bmatrix} = \begin{bmatrix} 1 & 0 & 0 & 0 \\ 0 & 0 & -1 & 0 \\ 0 & 1 & 0 & a_1 \\ 0 & 0 & 0 & 1 \end{bmatrix}$$

$$A_2 = \begin{bmatrix} c\theta_2 & -s\theta_2 c(90) & s\theta_2 s(90) & 0.c\theta_2 \\ s\theta_2 & c\theta_2 c(90) & -c\theta_2 s(90) & 0.s\theta_2 \\ 0 & s(90) & c(90) & a_2 \\ 0 & 0 & 0 & 1 \end{bmatrix} = \begin{bmatrix} c\theta_2 & 0 & s\theta_2 & 0 \\ s\theta_2 & 0 & -c\theta_2 & 0 \\ 0 & 1 & 0 & a_2 \\ 0 & 0 & 0 & 1 \end{bmatrix}$$

$$A_3 = \begin{bmatrix} c\theta_3 & -s\theta_3 c(0) & s\theta_3 s(0) & a_3 c\theta_3 \\ s\theta_3 & c\theta_3 c(0) & -c\theta_3 s(0) & a_3 s\theta_3 \\ 0 & s(0) & c(0) & 0 \\ 0 & 0 & 0 & 1 \end{bmatrix} = \begin{bmatrix} c\theta_3 & -s\theta_3 & 0 & a_3 c\theta_3 \\ s\theta_3 & c\theta_3 & 0 & a_3 s\theta_3 \\ 0 & 0 & 1 & 0 \\ 0 & 0 & 0 & 1 \end{bmatrix}$$

$$A_4 = \begin{bmatrix} c\theta_4 & -s\theta_4 c(90) & s\theta_4 s(90) & 0.c\theta_4 \\ s\theta_4 & c\theta_4 c(90) & -c\theta_4 s(90) & 0.s\theta_4 \\ 0 & s(90) & c(90) & 0 \\ 0 & 0 & 0 & 1 \end{bmatrix} = \begin{bmatrix} c\theta_4 & 0 & s\theta_4 & 0 \\ s\theta_4 & 0 & -c\theta_4 & 0 \\ 0 & 1 & 0 & 0 \\ 0 & 0 & 0 & 1 \end{bmatrix}$$

P12

$$A_5 = \begin{bmatrix} c\theta_5 & -s\theta_5\, c(0) & s\theta_5\, s(0) & 0 \cdot c\theta_5 \\ s\theta_5 & c\theta_5\, c(0) & -c\theta_5\, s(0) & 0 \cdot s\theta_5 \\ 0 & s(0) & c(0) & a_4 \\ 0 & 0 & 0 & 1 \end{bmatrix} = \begin{bmatrix} c\theta_5 & -s\theta_5 & 0 & 0 \\ s\theta_5 & c\theta_5 & 0 & 0 \\ 0 & 0 & 1 & a_4 \\ 0 & 0 & 0 & 1 \end{bmatrix}$$

$$^4T_H = A_1 A_2 A_3 A_4 A_5$$

$$= \begin{bmatrix} 1 & 0 & 0 & 0 \\ 0 & 0 & -1 & 0 \\ 0 & 1 & 0 & a_1 \\ 0 & 0 & 0 & 1 \end{bmatrix} \begin{bmatrix} c_2 & 0 & s_2 & 0 \\ s_2 & 0 & -c_2 & 0 \\ 0 & 1 & 0 & a_2 \\ 0 & 0 & 0 & 1 \end{bmatrix} \begin{bmatrix} c_3 & -s_3 & 0 & a_3 c_3 \\ s_3 & c_3 & 0 & a_3 s_3 \\ 0 & 0 & 1 & 0 \\ 0 & 0 & 0 & 1 \end{bmatrix} \begin{bmatrix} c_4 & 0 & s_4 & 0 \\ s_4 & 0 & -c_4 & 0 \\ 0 & 1 & 0 & 0 \\ 0 & 0 & 0 & 1 \end{bmatrix} \begin{bmatrix} c_5 & -s_5 & 0 & 0 \\ s_5 & c_5 & 0 & 0 \\ 0 & 0 & 1 & a_4 \\ 0 & 0 & 0 & 1 \end{bmatrix}$$

$$= \begin{bmatrix} c_2 & 0 & s_2 & 0 \\ 0 & -1 & 0 & -a_2 \\ s_2 & 0 & -c_2 & a_1 \\ 0 & 0 & 0 & 1 \end{bmatrix} \begin{bmatrix} A_3 \end{bmatrix} \begin{bmatrix} A_4 \end{bmatrix} \begin{bmatrix} A_5 \end{bmatrix}$$

$$= \begin{bmatrix} c_2 c_3 & -c_2 s_3 & s_2 & a_3 c_2 c_3 \\ -s_3 & -c_3 & 0 & -a_3 s_3 - a_2 \\ s_2 c_3 & -s_2 s_3 & -c_2 & a_3 s_2 c_3 + a_1 \\ 0 & 0 & 0 & 1 \end{bmatrix} \begin{bmatrix} A_4 \end{bmatrix} \begin{bmatrix} A_5 \end{bmatrix}$$

$$= \begin{bmatrix} c_2 c_{34} & s_2 & c_2 s_{34} & a_3 c_2 c_3 \\ -s_{34} & 0 & c_{34} & -a_3 s_3 - a_2 \\ s_2 c_{34} & -c_2 & s_2 s_{34} & a_3 s_2 c_3 + a_1 \\ 0 & 0 & 0 & 1 \end{bmatrix} \begin{bmatrix} A_5 \end{bmatrix}$$

$$= \begin{bmatrix} c_2 c_{34} c_5 + s_2 s_5 & -c_2 c_{34} s_5 + s_2 c_5 & c_2 s_{34} & a_4 c_2 s_{34} + a_3 c_2 c_3 \\ -s_{34} c_5 & s_{34} s_5 & c_{34} & a_4 c_{34} - a_3 s_3 - a_2 \\ s_2 c_{34} c_5 - c_2 s_5 & -s_2 c_{34} s_5 - c_2 c_5 & s_2 s_{34} & a_4 s_2 s_{34} + a_3 s_2 c_3 + a_1 \\ 0 & 0 & 0 & 1 \end{bmatrix}$$